Extension 28 mm -

12 177 970 90 Product version from 5/1/2014

Extension 28 mm -

12 177 970 90 Product version from 5/1/2014

for xTOOL thermostat modules 35 503 / 511 / 521 /
531 / 524 / 534 970 90

Extension 28 mm -

12 177 970 90 Product version from 5/1/2014

mm [inches]

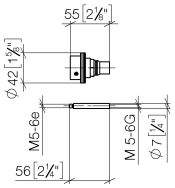

Extension 28 mm -

12 177 970 90 Product version from 5/1/2014

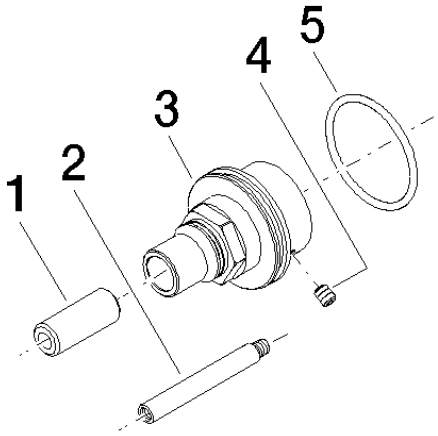

Spare parts list

No.	Item Number	Name	Quantity used	Delivery time
1	09 21 02 111 90	sleeve	1	2
2	90 31 09 095 00 90	bar	1	2
3	09 21 02 110 90	cover	1	2
4	09 31 11 079 90	pin	2	2
5	09 14 10 038 90	seal	1	2

We reserve the right to change designs, product range and technical specifications without prior notice.
More information can be found at: www.dornbracht.com +49 (0) 2371 8899 900 mail@dornbracht.com